MO-2000N/Z082,Z083

JUKI

BEZ08230PJA
No.0270-01

PARTS LIST

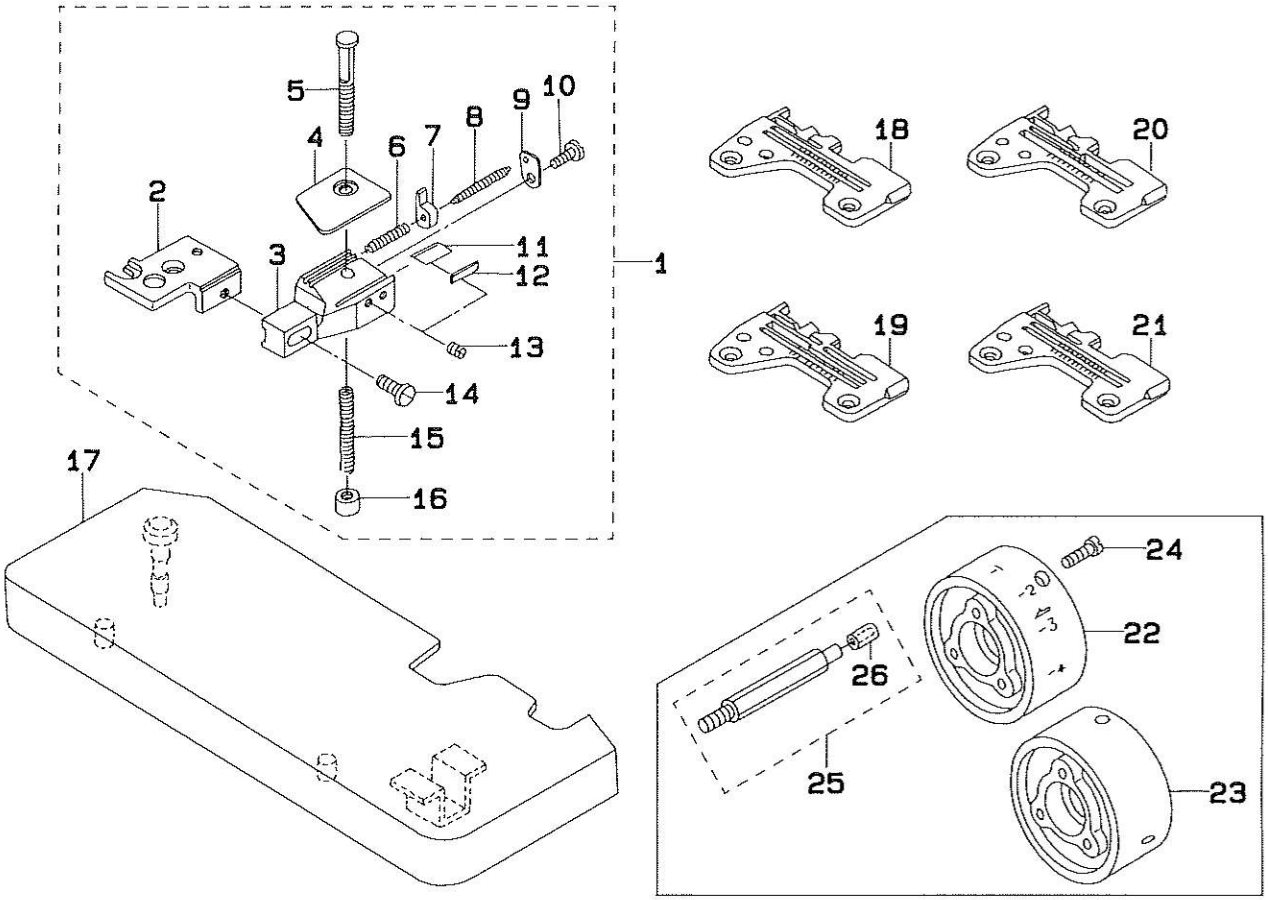

REF.NO	NOTE	PART NO.	DESCRIPTION	ヒンメイ	AMT.
1		MAZ-082000B0	CHAIN-OFF ROLLING-IN DEVICE	ｶﾗｶﾝ ﾏｷｺﾐｿｰﾁ ｸﾐ	1
2		MAZ-08202000	THROAT PLATE BASE A	ﾊﾘｲﾀﾀﾞｲ A	(1)
3		MAZ-08201000	HOLDER BASE	ｶﾗｶﾝ ﾏｷｺﾐﾀﾞｲ	(1)
4		MAZ-08203000	REAR PRESSER PLATE	ｶﾗｶﾝ ｵｻｴｲﾀ	(1)
5		MAZ-08204000	REAR PRESSER REGULATING SHAFT	ｶﾗｶﾝｱﾂ ﾁｮｳｾｲ ｼﾞｸ	(1)
6		MAZ-08210000	REAR GUIDE SPRING	ｶﾗｶﾝ ｱﾝﾅｲ ﾊﾞﾈ	(1)
7		MAZ-08207000	REAR GUIDE	ｶﾗｶﾝ ｱﾝﾅｲ	(1)
8		MAZ-08208000	REAR GUIDE SHAFT	ｶﾗｶﾝ ｱﾝﾅｲ ｼﾞｸ	(1)
9		MAZ-08209000	REAR GUIDE SHAFT BASE	ｶﾗｶﾝ ｱﾝﾅｲ ｼﾞｸｳｹ	(1)
10		SS-7090850-SP	SCREW 9/64-40 L=8	ﾏﾙﾋﾗﾈｼﾞ 9/64-40 L=8	(1)
11		MAZ-08211000	KNIFE	ｺﾃｲﾒｽ	(1)
12		MAZ-08212000	KNIFE PRESSER	ｺﾃｲﾒｽ ｻﾞｶﾞﾈ	(1)
13		SS-8090410-SP	SCREW 9/64-40 L= 3.5	ﾄﾒﾈｼﾞ 9/64-40 L=3.5	(2)
14		SS-7091110-SP	SCREW 9/64-40 L=10.5	ﾏﾙﾋﾗﾈｼﾞ 9/64-40 L=10.5	(1)
15		MAZ-08206000	REAR PRESSER REGULATING SPRING	ｶﾗｶﾝｱﾂ ﾁｮｳｾｲ ﾊﾞﾈ	(1)
16		MAZ-08205000	REAR PRESSER REGULATING KNOB	ｶﾗｶﾝｱﾂ ﾁｮｳｾｲ ﾂﾏﾐ	(1)
17		119-48783	CLOTH PLATE ASH.	ﾇﾉﾀﾞｲ(ｸﾐ)	1
18	#01	R4200-H2D-D00	THROAT PLATE	ﾊﾘｲﾀ	1
19	#02	R4300-H2D-E00	THROAT PLATE	ﾊﾘｲﾀ	1
20	#03	R4200-H2D-D0F	THROAT PLATE	ﾊﾘｲﾀ	1
21	#05	R4200-H2E-D0B	THROAT PLATE	ﾊﾘｲﾀ	1
22	#06	119-56505	HANDWHEEL C	ﾊｽﾞﾐｸﾞﾙﾏ (C)	1
23	#07	119-56604	HANDWHEEL C	ﾊｽﾞﾐｸﾞﾙﾏ (C)	1
24	#04	SS-7111410-SP	SCREW 11/64-40 L=14	ﾏﾙﾋﾗﾈｼﾞ 11/64-40 L=14	3
25	#04	MAZ-073010A0	STOPPER STUD ASH.	ｼﾝｸﾛﾅｲｻﾞｰﾏﾂﾘﾄﾞﾒ ｸﾐ	1
26	#04	G5173-120-000	POLYURETHANE TUBE 6X4	ﾎﾟﾘｳﾚﾀﾝﾁｭｰﾌﾞ 6X4	(0.1)

Note (注記)#01.....FOR OD4-300 — OD4-300 用
#02.....FOR OD6-300 — OD6-300 用
#03.....FOR OD4-306 — OD4-306 用
#04.....FOR Z083 — Z083 用
#05.....FOR OE4-300 — OE4-300 用
#06.....FOR MO-2400N,2500N/Z083 — MO-2400N,2500N/Z083 用
#07.....FOR MO-2300N/Z083 — MO-2300N/Z083 用
*ALL PARTS OTHER THAN THE ABOVE ARE SAME AS THOSE USED IN MODEL MO-2000N SERIES.
上記以外の部品は、 MO-2000N シリーズと共通です。

JUKI CORPORATION

1994. 3 Printed in Japan Ⓜ (Te)