FIRST EDITION

Finest Quality

Union Special®
INDUSTRIAL SEWING EQUIPMENT

CATALOG NO. T106 P

STYLE
51200

LIST OF PARTS
FOR
STYLE 51200 BE

Catalog No. T106 P

LIST OF PARTS

CLASS 51200

Style

51200 BE

First Edition

UNION SPECIAL CORPORATION
INDUSTRIAL SEWING MACHINES
CHICAGO

Printed in U.S.A.

October, 1978

IDENTIFICATION OF MACHINES

Each UNION SPECIAL machine is identified by a Style number which is stamped into the name plate on the machine. Style numbers are classified as standard and special. Standard Style numbers have one or more letters suffixed, but never contain the letter "Z". Example: "51200 BE". Special Style numbers contain the letter "Z". When only minor changes are made in a standard machine, a "Z" is suffixed to the Standard Style number. Example: "51200 BEZ".

Styles of machines similar in construction are grouped under a class number which differs from the Style number, in that it contains no letters. Example: "51200".

APPLICATION OF CATALOG

This catalog applies specifically to the Standard Style of machine as listed herein. It can also be applied with discretion to some Special Styles of machines in this class. Reference to direction, such as right, left, front, back, etc., are given from the operator's position while seated at the machine. Operating direction of handwheel is toward the operator.

STYLE OF MACHINE

Streamlined Flat Bed, Low Throw, Trimming Knife Abreast of Needle, Rear Chip Disposal, One Needle, Needle Bearing Needle Bar Drive, Light Weight Presser Bar and Needle Bar Driving Mechanism, Single Disc Take-up, Single Reservoir Enclosed Automatic Lubricating System, Filter Type Oil Return Pump with Oil Pan Base Plate, Oil Siphon Assembly, Lateral Looper Travel.

51200 BE For miscellaneous operations (while simultaneously trimming) on ladies' blouses, children's and ladies' dresses and similar operations where chaining is required on light to medium weight materials. Knee press and tape reel furnished with machine. Presser foot with 9/16 inch tape tube on toe for taping operation is optional and will be furnished in place of other presser foot, if specified. Seam specification 401-SSa-1. Stitch range 9 to 14 per inch.

NEEDLES

Each UNION SPECIAL needle has both a type number and size number. The type number denotes the kind of shank, point, length, groove, finish and other details. The size number, stamped on the needle shank, denotes the largest diameter of blade measured in thousandths of an inch, midway between the shank and the eye. Collectively, the type number and size number is the complete symbol, which is given on the label of all needles packaged and sold by Union Special.

Standard needle for Style 51200 BE is Type 108 GHS. It has a round shank, round point, extra short, double groove, struck groove, ball eye, spotted, ball point, chromium plated - sizes 070/027, 075/029, 080/032, 090/036, 100/040, 110/044, 125/049.

To have needle orders promptly and accurately filled, an empty package, a sample needle, or the type and size number should be forwarded. Use description on label. A complete order would read as follows: "1000 Needles, Type 108 GHS, Size 080/032.

Selection of the proper needle size should be determined by the size of thread used. Thread should pass freely through the needle eye in order to produce a good stitch formation.

IDENTIFYING PARTS

Where construction permits, each part is stamped with its part number. On some of the smaller parts, and on those where the construction does not permit, an identification letter is stamped in to distinguish the part from similar ones.

Part numbers represent the same part, regardless of catalog in which they appear.

IMPORTANT! ON ALL ORDERS, PLEASE INCLUDE PART NAME AND STYLE OF MACHINE FOR WHICH PART IS ORDERED.

USE GENUINE NEEDLES AND REPAIR PARTS

Success in the operation of these machines can be secured only with genuine UNION SPECIAL Needles and Repair Parts as furnished by the Union Special Corporation, its subsidiaries and authorized distributors. They are designed according to the most approved scientific principles, and are made with utmost precision. Maximum efficiency and durability are assured.

Genuine needles are packaged with labels marked *Union Special*®. Genuine repair parts are stamped with the Union Special trademark, U S Emblem. Each trademark is your guarantee of the highest quality in materials and workmanship.

TERMS

Prices are net cash and subject to change without notice. All shipments are forwarded f. o. b. shipping point. Parcel Post shipments are insured unless otherwise directed. A charge is made to cover postage and insurance.

OILING

The oil has been drained from the machine before shipping, and the reservoir must be filled before beginning to operate. Use a straight mineral oil with a Saybolt viscosity of 90 to 125 seconds at 100° Fahrenheit.

Oil is filled at the spring cap in the top cover and the level is checked at the sight gauge on the front of the machine. The oil level should be maintained between the red lines on the gauge. The capacity of the oil reservoir is 12 ounces.

The machine is automatically lubricated and no oiling, other than keeping the main reservoir filled, is necessary.

A daily check before the morning start should be made and oil added if required. Oil which has gone through the machine is filtered and pumped back into the main reservoir, making too frequent oilings unnecessary. Excessive oil in the main reservoir may be drained at the plug screw in the main frame directly under the handwheel.

The following is a numerical list of the parts in this machine. Quantities, part numbers, and descriptions are given. Following the parts list are photographs of some of the major parts.

Amt.	Part No.	Description
1	8	Feed Rocker Shaft
3	18	Nut for 51240 E, 55241 N, 55244 G
3	20	Washer for 51282 AH
2	20	Washer for 51236 G, 51758
2	25 S	Screw for 51282 AJ
1	27-435 Blk.	Needle Bar Eyelet Washer
2	28	Screw for 51704
2	50-216 Blk.	Pin for 51757 B
1	50-458 Blk.	Pin for 51241 K
1	50-648 Blk.	Lucite Oil Gauge
1	50-789 Blk.	Oil Cap Hinge Pin for 52882 AD
3	52 A	Looper Thread Eyelet (98 A)
1	69 FD	Screw for 21664
1	73	Screw for looper
1	77	Screw for needle lever link pin, upper
1	77	Screw for 51054
1	77	Screw for 51236 A
2	77 F	Screw for 51281 AR
2	80	Screw for cloth plate
2	80	Screw for 21664 F
2	80	Screw for 51280 N
1	81	Screw for 51242 Y (12982)
1	82	Screw for 51236 G
2	87	Screw for throat plate
2	88	Set Screw for 15465 F
1	88	Screw for 52894 AK
2	90	Screw for 52882 Y
2	90	Screw for 52882 AD
2	90	Screw for 52894 AB
1	91	Clamp Screw for presser foot
2	93	Screw for B21375 AH
1	95	Plug Screw for bed
1	95	Screw for 51270 B
2	95	Screw for 51147
1	96	Screw for 51244
1	96	Spot Screw for 51723 A
2	98	Screw for 482
2	98	Screw for 51235
1	98	Screw for 51244
3	98 A	Screw for 52 A
1	98 A	Screw for 51291 A
4	109	Tension Disc
2	166	Screw for 52972
1	187 A	Screw for 1741 B
1	188 D	Thumb Screw for 753
1	258	Nut for 51280 E
1	258 A	Nut for 660-136
2	258 A	Nut for 21171 AC
1	258 A	Nut for 56334 E
1	258 A	Lock Nut for 51745
1	258 A	Nut for 52894 AM
2	269	Nut for 51236 G, 51240 E
1	402	Screw for 53783 A
2	482	Collar for 8 (98)
1	531	Screw for 21662 S, 51257 M

Amt.	Part No.	Description
2	531	Screw for 51493 BQ
1	643-127 Blk.	Gasket for 51493 AG
1	660-136	Feed Crank Link Oil Tube (258 A)
1	660-168	Knee Press Plate Cushion for 21664
1	660-202	"O" Ring for pulley
1	660-207	Oil Seal Ring for foot lifter lever bushing
2	660-212	Oil Seal Ring for 51150, 51250 E (22586 R)
2	660-215	Retaining Ring for 52336
1	660-219 G	Hinge Pin for 21662 R
2	666-65	Oil Wick for 51144
2	666-111	Oil Wick for 8
2	666-114	Oil Wick for right main shaft bearing
2	666-118	Oil Wick for left main shaft bearing
1	666-149	Felt Wick for 51054
1	666-170	Oil Wick for needle lever
2	666-179	Wedge Pin for 666-111
1	666-201	Felt Plug for 51294 U
1	666-208	Oil Wick for 51294 X
1	666-209	Felt Siphon Cup Disc for 51294 U
1	666-214	Felt Lint Filter for 51294 M
2	667 B-10	Dowel Pin for 51273 C
2	668-25	Eyelet for 51292 D
2	668-28	Eyelet Locking Ring for 51292 D
2	719	Screw for 51150, 56350 A
1	753	Support Axle Cone for 21171 AB (188 D)
1	753	Support Axle Cone for 21171 AB (22576)
1	906	Screw for 39271 A
1	906 A	Screw for 51250 T (51242 M)
1	1349 A-5	Spring for 21177 A
1	1741 A	Pin for 1741 B
1	1741 B	Chain Cutting Knife for 51220 K (187 A, 1741 A)
1	6042 A	Washer for 52894 AM
1	7947	Nut for 51294 R
1	12538	Nut for 51241 K
1	12982	Lock Nut for 81
1	12982	Nut for 92201
1	15465 F	Looper Rocker Cone for 29192 (88)
1	20149 C	Pin for 51250 T
2	21114	Tape Reel Disc for 21171 AB
1	21171 S	Tape Reel Support for 21171 AB (22581, 52782 C)
1	21171 U	Tape Guide for 21171 AB (22585 C)
1	21171 V	Tape Guide Support for 21171 AB (22585 A)
1	21171 W	Tape Guide Wire for 21171 AB (22585 A)
1	21171 AB	Tape Reel Assembly

Amt.	Part No.	Description
1	21171 AC	Tape Reel Pin for 21171 AB (258 A)
1	21177 A	Tape Reel Spring Collar for 21171 AB (22647 K-24)
1	21210 A	Looper Collar
1	21212	Oil Siphon Connection Locking Ring
1	B21375 AH	Belt Guard (93)
1	21657-3	Tension Release Separator (22598 C, 80557)
1	21657 E	Washer for 51757 B
1	21657 W	Tension Release Lever Shaft
1	21657 X	Tension Release Lever Shaft Bushing
1	21657 Y	Tension Release Lever Connection (402, 22596)
1	21660 H	Knee Press Assembly
1	21662 R	Knee Press Lifter Arm for 21660 H (660-219 G, 22650 CE-6, 39536 AD)
1	21662 S	Knee Press Link Connection for 21660 H (531)
1	21662 T	Knee Press Link for 21660 H
1	21662 U	Knee Press Lever for 21660 H (22557 A, 39536 AD)
1	21662 V	Torsion Spring for 21660 H
1	21663 A	Knee Press Plate Lever for 21660 H
1	21664	Knee Press Plate for 21660 H (69 FD)
1	21664 C	Bracket for 21660 H
1	21664 F	Mounting Bracket for 21660 H (80, 92201)
1	21695 Y	Finger Guard (22517 B)
3	22513	Screw for 35731 A
2	22517	Screw for 51273 C
2	22517 B	Screw for 21695 Y
2	22519 C	Screw for 51235 A (51235 G)
1	22519 H	Screw for 51244 B
1	22524	Feed Dog Height Adjusting Screw
6	22524	Screw for 51282 AF
1	22528	Screw for feed dog
1	22528	Screw for 51757 B
1	22537	Screw for 53783 N
1	22539 H	Plug Screw
3	22541 B	Screw for 52882 AD
1	22542	Screw for 51282 Y
4	22548	Screw for 52882 AE
2	22550	Screw for 51278 H
1	22557 A	Screw for 21662 U (43137 E)
1	22557 B	Screw for 53783 L
2	22559 A	Bearing Cap Screw, lower, for 29105 AA
2	22559 B	Bearing Cap Screw, upper, for 29105 AA
2	22559 G	Screw for 29066 R
1	22560 B	Set Screw for 51134
2	22560 B	Screw for 51493 BP
1	22562 A	Screw for 51254 J
1	22564	Screw for ndl. lever link pin, lower
3	22569 B	Screw for bearing housing
5	22569 B	Screw for 51282 Y
3	22569 B	Screw for 51493 AH
15	22571 A	Plug Screw
2	22571 B	Plug Screw
1	22576	Screw for 753
1	22580 D	Set Screw for 51723 A
2	22581	Screw for 21171 S
1	22585 A	Screw for 21171 V

Amt.	Part No.	Description
1	22585 A	Screw for 21171 W
2	22585 A	Screw for 51282 AF
1	22585 B	Screw for 51225 (51225 W)
1	22585 C	Screw for 21171 U
1	22586 R	Screw for 660-212 (51250 D, 51250 F)
1	22596	Screw for 21657 Y
2	22596 D	Screw for 51250 S
1	22598 C	Screw for 21657-3
1	22647 K-24	Thumbscrew for 21177 A
1	22650 CE-6	Set Screw for 21662 R
1	22729	Screw for 51243 C
1	22729 A	Screw for 51294 U
1	22729 B	Screw for 51294 U
1	22733 B	Screw for 52882 L (41394 A)
1	22758 C	Screw for 53783 A
3	22760 A	Screw for 51281 AP (35772 H)
2	22768	Screw for 51236 B
1	22768	Screw for 56358
1	22768	Screw for 56358 A
1	22768	Screw for 51244 B
1	22799 N	Screw for 52971 J
1	22801	Screw for 51225
1	22811 B	Screw for 51242 W
1	22819	Screw for 51217 E
1	22829	Lock Nut Screw for 51745
1	22834	Needle Guard Adjusting Screw
2	22839 C	Screw for cloth plate
1	22845 B	Screw for 51281 AN
3	22848	Screw for 51282 AH (20)
1	22848	Screw for 51758
9	22848	Screw for 52882 L
1	22852 A	Screw for 51242 Y (51242 M)
1	22852 A	Screw for 51250 S
1	22863	Feed Dog Holder Adjusting Screw
1	22883 A	Plug Screw
1	22889 A	Adaptor Plug Screw for 51758
2	22889 C	Plug Screw, back
1	22889 D	Plug Screw, left
4	22894 C	Eccentric Set Screw for 29105 AA
2	22894 C	Screw for 52373 B
1	22894 D	Eccentric Spot Screw for 29105 AA
1	22894 D	Spot Screw for 51406
1	22894 F	Screw for pulley
1	22894 H	Screw for 51242 W
2	22894 J	Screw for 51247
1	22894 T	Set Screw for 51142 F
1	29066 R	Needle Lever Connecting Rod Ball Joint Assembly (22559 G)
1	29105 AA	Looper Drive Eccentric Assembly
1	29192	Looper Rocker Assembly
1	29348 Y	Needle Lever Assembly
2	29476 DV	Feed Lift and Looper Avoid Eccentric Assembly, .062 inch throw
1	29476 HA	Crankshaft Assembly, .770 inch throw

Amt.	Part No.	Description
1	29476 KN	Knife Drive Connection Assembly, .112 inch throw
2	35178 D	Spring for 666-65
2	35178 D	Spring for 666-114
2	35731 A	Presser Bar Connection Guide Plate (22513)
3	35772 H	Washer for 51281 AN
1	39270 E	Upper Knife
1	39271 A	Upper Knife Holder (906)
2	39536 AD	Spring Washer for 21662 R, 21662 U
1	39582 L	Oil Cap for 52882 AD
2	41394 A	Gasket for 22733 B
1	43137 E	Washer for 22557 A
1	43266	Nut for 51292 G
1	51054	Feed Crank Link Pin (77)
2	51054	Link Pin for needle lever (77, 22564)
1	51134	Feed Bar (22560 B)
1	51134 C	Feed Bar Shaft
1	51134 J	Feed Dog Holder Washer
1	51134 P	Felt for 51134 C
1	51134 R	Lubricating Felt Guard
1	51142 F	Eccentric for 29476 KN (22894 T)
1	51144	Looper Rocker Shaft
1	51145 A	Eccentric Bearing Assembly for 29476 DV
1	51145 E	Eccentric Bearing Assembly for 29476 KN
1	51147	Main Shaft Collar (95)
1	51150	Needle Lever Shaft Stop Collar (719)
1	51201 N	Cloth Plate (80, 22839 C)
1	51205 K	Feed Dog (22528)
1	51213	Looper Rocker for 29192
2	51216 G	Needle Lever Connecting Rod
28	51216 M	Needle Bearing Roller for 29476 HA
1	51216 N	Washer for 56315
1	51216 N	Washer for 55244 G
1	51216 P	Nut for 56315
1	51217 E	Needle Bar (22819)
1	51220 H	Presser Foot, optional for taping operation (91)
1	51220 K	Presser Foot, where chaining is required (91)
1	51221 C	Pulley (22894 F)
1	51222 K	Main Shaft
1	51224 K-1/8	Throat Plate (87)
1	51225	Needle Guard (22585 B, 22801)
1	51225 W	Washer for 51225
1	51230 AC	Presser Foot Bottom for 51220 H
1	51230 AD	Presser Foot Bottom for 51220 K

Amt.	Part No.	Description
1	51230 AE	Presser Foot Shank for 51220 K (91)
1	51235	Feed Rocker (98)
1	51235 A	Feed Rocker Arm (22519 C, 51235 G)
2	51235 G	Washer for 22519 C
2	51236 A	Link Pin for 51145 A (77)
1	51236 B	Feed Crank Stud Cap (22768)
1	51236 D	Feed Crank Link for 51236 E
1	51236 E	Feed Crank Link Assembly
1	51236 F	Feed Crank Ferrule for 51236 E
1	51236 G	Feed Crank Stud (20, 269, 82)
1	51240 E	Looper Connecting Rod (18, 269)
1	51241 K	Looper Connecting Rod and Ball Joint, right (12538)
2	51242 L	Thrust Washer for looper drive lever rocker
3	51242 M	Washer for 906 A, 22852 A, 52841 G
1	51242 P	Looper Drive Lever Shaft
1	51242 R	Looper Drive Lever Shaft Bushing, middle
1	51242 S	Looper Drive Lever Shaft Bushing, rear
1	51242 W	Looper Drive Lever (22811 B, 22894 H)
1	51242 Y	Looper Drive Lever Rocker (81, 22852 A, 51242 M)
1	51242 Z	Looper Drive Lever Shaft Bushing, front
1	51243 C	Ball Stud Fork (22729)
1	51244	Looper Rocker Frame (96, 98)
1	51244 B	Looper Rocker Shaft Arm (22519 H, 22768)
2	51244 L	Thrust Washer for looper rocker shaft
1	51244 N	Looper Rocker Shaft Clamp Collar (18, 51216 N, 55244 G)
1	51246	Looper Rocker Stud Nut
1	51247	Main Shaft Counter-weight (22894 J)
1	51249 B	Lower Knife
1	51250 A	Bushing for 51215 J
1	51250 D	Washer for 22586 R
1	51250 F	Gasket for 22586 R
1	51250 S	Lower Knife Block (22596 D, 22852 A)
1	51250 T	Lower Knife Clamp (906 A, 20149 C)
1	51254 C	Needle Bar Bushing, upper
1	51254 D	Needle Bar Bushing, lower
1	51254 J	Needle Bar Connect. for 29348 Y (22562 A)
1	51256 C	Presser Bar Spring
1	51257 K	Presser Bar
1	51257 M	Presser Bar Connection and Guide (531)

Amt.	Part No.	Description
1	51257 AA	Presser Bar Bushing, lower
1	51270 B	Needle Thread Take-up Wire (95)
1	51272 D	Block Guide Collar Shaft Spring
1	51273 C	Upper Knife Lever Stud Support Bracket (667 B-10, 22517)
1	51278 H	Chip Guard (22550)
1	51280 E	Throat Plate Support Pin (258)
2	51280 J	Dowel Pin for 51280 N
1	51280 N	Throat Plate Support (80)
1	51281 AN	Cloth Plate Cover Spring (22760 A, 22845 B, 35772 H)
1	51281 AP	Cloth Plate Cover
1	51281 AR	Cloth Plate Cover Adjustable Extension (77 F)
1	51282 Y	Head Cover (22569 B)
1	51282 Z	Gasket for 51282 Y
1	51282 AE	Needle Lever Bearing Oiler (90)
1	51282 AF	Oil Reservoir Top Cover (22524, 22585 A)
1	51282 AH	Oil Shield (20, 22848)
1	51282 AJ	Hinged Oil Shield (25 S)
2	51282 AK	Spring for 51282 AJ
1	51283 H	Presser Foot Lifter and Tension Disc Release Lever
1	51290 T	Main Shaft Bushing, middle
1	51291 A	Looper Thread Guard (98 A)
2	51292 A	Tension Post Ferrule
2	51292 C	Tension Nut
2	51292 D	Tension Thread Eyelet
1	51292 F-1	Tension Spring, looper
1	51292 F-5	Tension Spring, needle
2	51292 G	Tension Post (43266)
1	51294 K	Upper Clamp for 51294 U
1	51294 M	Oil Siphon Tube
1	51294 P	Oil Tube Clamp (7947, 51294 R)
1	51294 R	Screw for 51294 P (7947)
1	51294 U	Oil Siphon Assembly (22729 A, 22729 B)
1	51294 X	Oil Tube for knife arm
1	51294 Z	Oil Siphon Tube Connection (21212)
1	51382 A	Gasket for 51282 AF
1	51406	Eccentric for 29476 DV (22894 D)
1	51409 C	Looper (73, 21210 A)
2	51491 C	Lead-in Thread Eyelet

Amt.	Part No.	Description
1	51493 D	Oil Pump Driving Shaft
2	51493 E	Driving Shaft Gear
1	51493 AG	Oil Pump Housing (22569 B)
1	51493 AH	Oil Pump Housing Cover (22569 B)
1	51493 BK	Lint Filter Screen
1	51493 BP	Oil Pump Driving Gear (22560 B)
1	51493 BQ	Oil Pump Driven Gear (531)
1	51704	Cast-off Plate (28)
1	51723 A	Take-up (96, 22580 D)
1	51745	Looper Rocker Cone Stud for 29192 (258 A, 22829, 51246)
1	51757 B	Cast-off Plate Support (21657 E, 22528)
1	51758	Frame Needle Thread Eyelet (20, 22848, 22889 A)
1	52336	Link Pin for 52373 C (660-215)
2	52373 A	Bushing for 52373
1	52373 B	Knife Arm Stud
1	52373 C	Knife Arm
1	52470	Stop for looper connecting rod
1	52703 A	Edge Guide
2	52782 C	Adaptor Screw for 21171 S
1	52794 G	Oil Tube for feed lift and looper avoid eccentric
1	52841 G	Locking Stud for 51242 Y (52841 J)
1	52841 J	Nut for 52841 G
1	52882 L	Oil Reservoir Back Cover (22733 B, 22848, 41394 A)
1	52882 M	Gasket for 52882 L
1	52882 P	Gasket for 52882 AD
1	52882 U	Gasket for 52882 AE
1	52882 W	Gasket for 22542
1	52882 Y	Baffle Plate (90)
1	52882 AA	Oil Drip Plate for 52882 AD (90)
1	52882 AC	Oil Cap Torsion Spring for 52882 AD
1	52882 AD	Chamber Cover (22541 B)
1	52882 AE	Crank Chamber Cover (22548)
1	52883 R	Presser Foot Lifter Lever Bushing
1	52883 S	Presser Foot Lifter Lever Bell Crank Spring
2	52890 C	Main Shaft Bushing, left and inner right
1	52891 B	Crankshaft Housing, includes bushing (22569 B)

Amt.	Part No.	Description
1	52892	Tension Post Support
2	52894 AB	Oil Tube Holder (90)
1	52894 AK	Oil Tube for looper rocker and left ball joint (88)
1	52894 AM	Oil Tube for right ball joint (258 A, 6042A)
2	52936	Feed Rocker Shaft Bushing
1	52944 T	Looper Rocker Shaft Bushing, left
1	52944 U	Looper Rocker Shaft Bushing, right
1	52971 J	Knife Clamp Plate (22799N)
1	52972	Knife Guide Collar (166)
1	52978 G	Hinge Pin for 51282 AJ
1	53783 A	Lifter Lever Link (402, 22758 C)
1	53783 L	Presser Foot Lifter Lever Bell Crank (22557 B)
1	53783 M	Presser Foot Lifter Lever Connecting Rod
1	53783 N	Presser Foot Lifter Lever, internal (22537)
1	55241 E	Spring for 51241 K
1	55241 N	Looper Connecting Rod Ball Joint, left (18)
1	55244 G	Looper Rocker Shaft Collar Stud (18, 51216 N)
1	56315	Needle Lever for 29348 Y
1	56334 E	Feed Dog Holder (258 A, 51134 J)
1	56341 G	Spring for 51241 K
1	56350 A	Needle Lever Stud for 29348 Y (719)
1	56354 A	Needle Bar Link for 29348 Y
1	56356	Presser Spring Regulator
1	56358	Needle Bar Thread Eyelet (22768)
1	56358 A	Needle Lever Thread Eye. (22768)
1	56390 E	Crankshaft Bearing Housing Gasket
2	80557	Spacing Washer for 21657-3 52892
1	92201	Spring Adjusting Screw for 21664 F, (12982)

NOTE: Numbers in parenthesis following parts description indicate the screws, nuts, etc., used to attach or hold these parts.

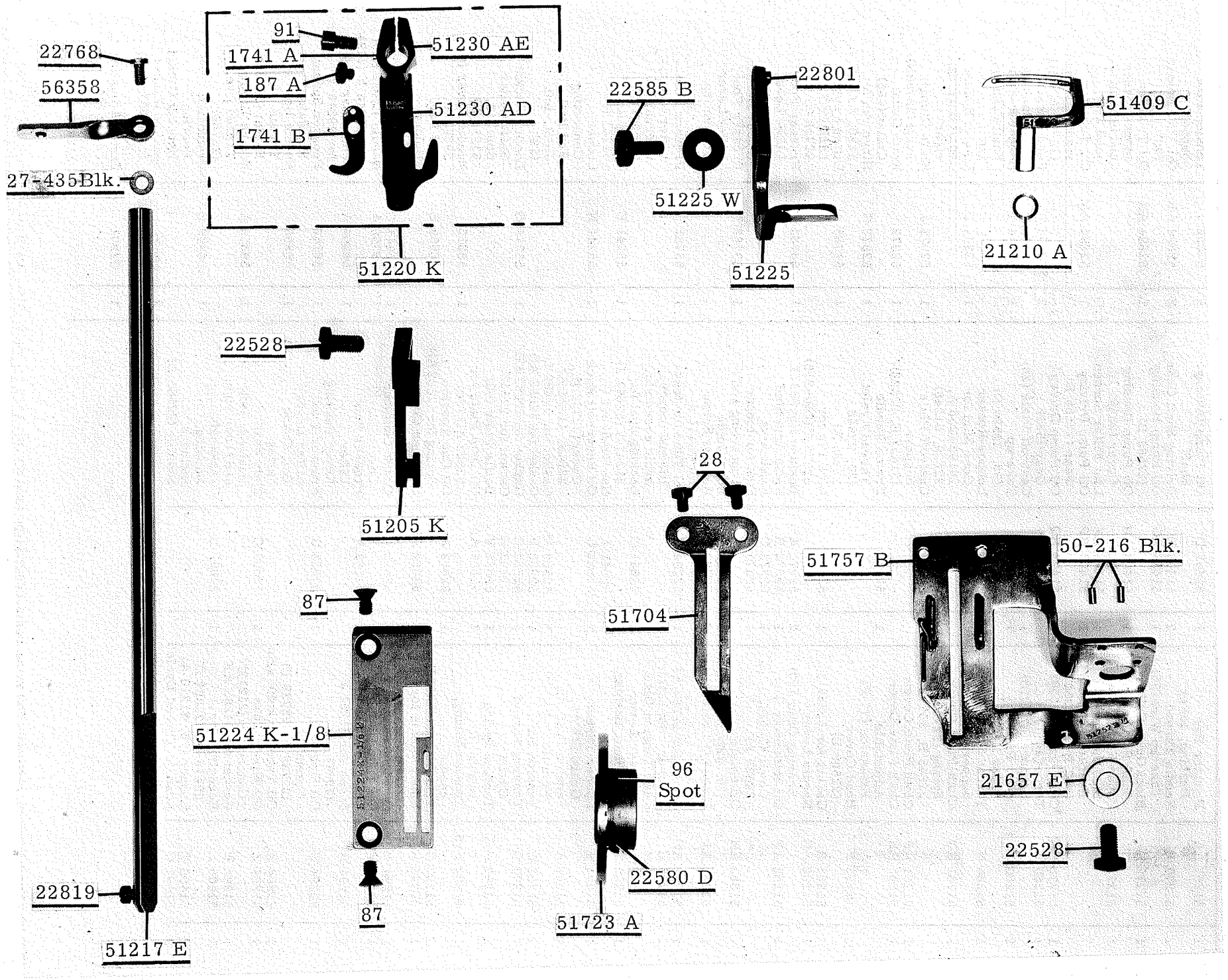
22768
56358
27-435 Blk.
22819
51217 E
91
1741 A
187 A
1741 B
51230 AE
51230 AD
51220 K
22585 B
51225 W
22801
51225
51409 C
21210 A
22528
51205 K
87
51224 K-1/8
87
28
51704
96
Spot
22580 D
51723 A
51757 B
50-216 Blk.
21657 E
22528

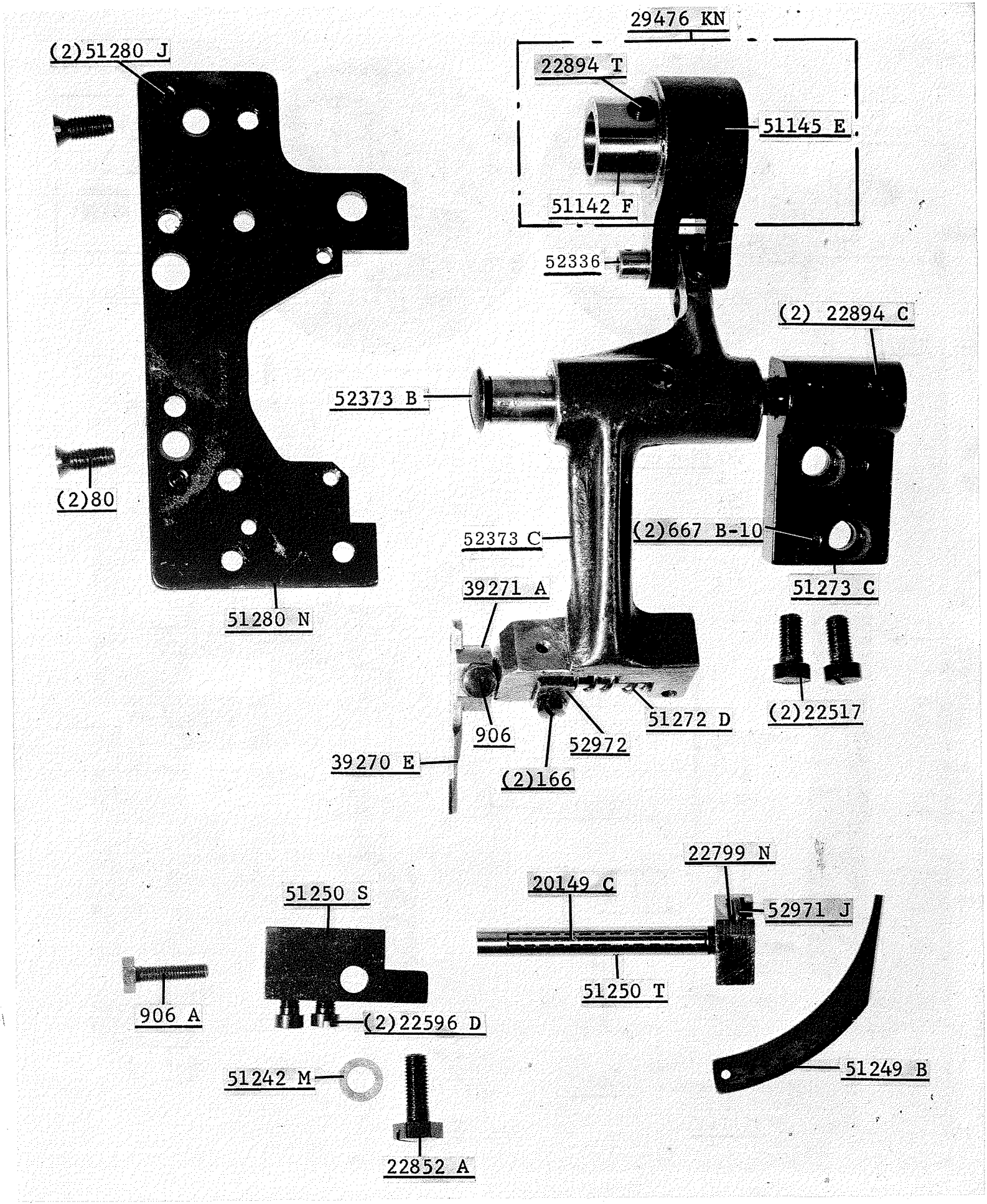
29476 KN
(2)51280 J
22894 T
51145 E
51142 F
52336
(2) 22894 C
52373 B
(2)80
52373 C
(2)667 B-10
51273 C
51280 N
39271 A
(2)22517
906
51272 D
52972
39270 E
(2)166
22799 N
20149 C
51250 S
52971 J
906 A
51250 T
(2)22596 D
51242 M
51249 B
22852 A

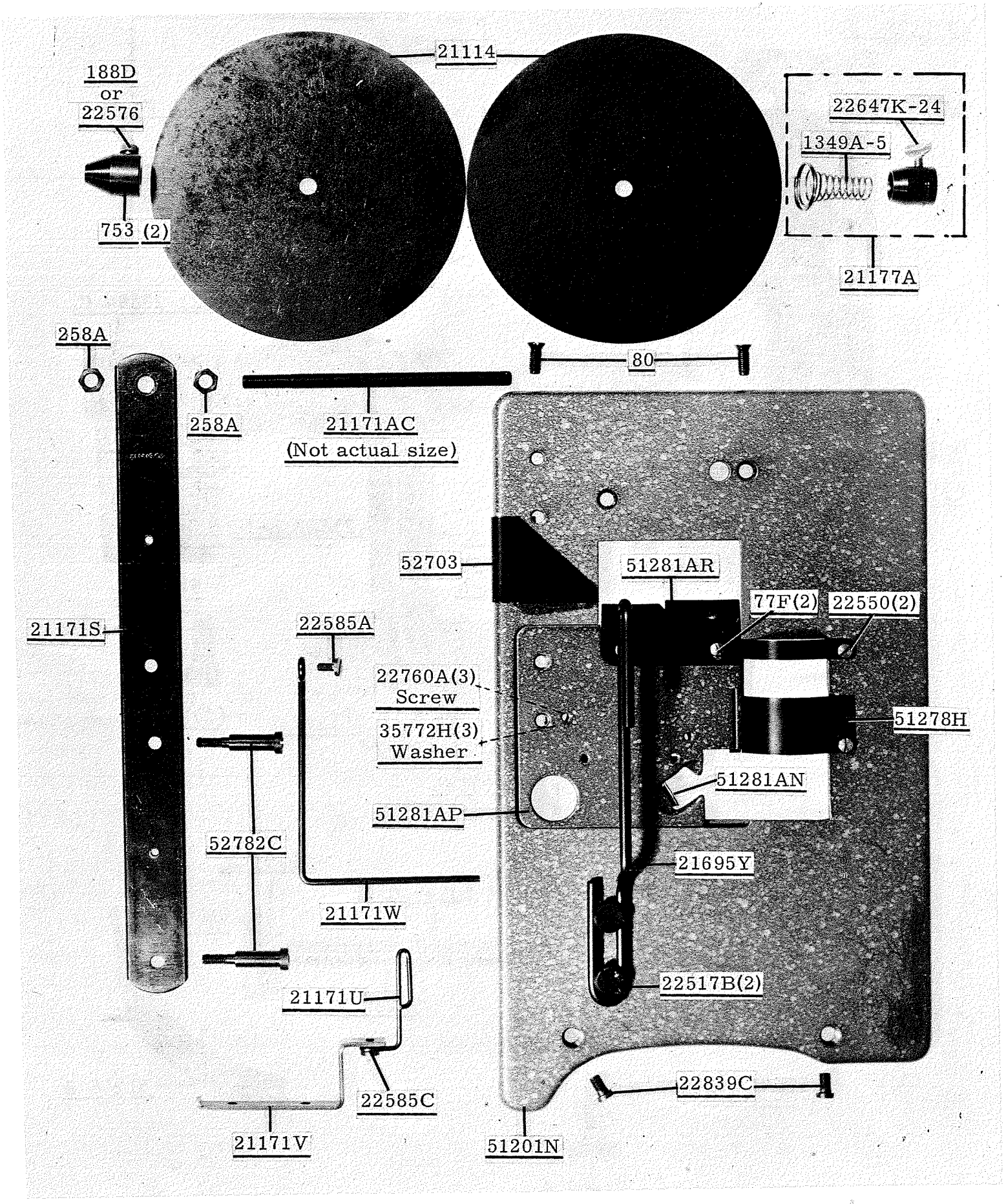
188D
or
22576
753 (2)
21114
22647K-24
1349A-5
21177A
258A
258A
21171AC
(Not actual size)
80
52703
51281AR
77F(2)
22550(2)
21171S
22585A
22760A(3)
Screw
35772H(3)
Washer
51278H
51281AN
51281AP
52782C
21695Y
21171W
21171U
22517B(2)
22839C
22585C
21171V
51201N

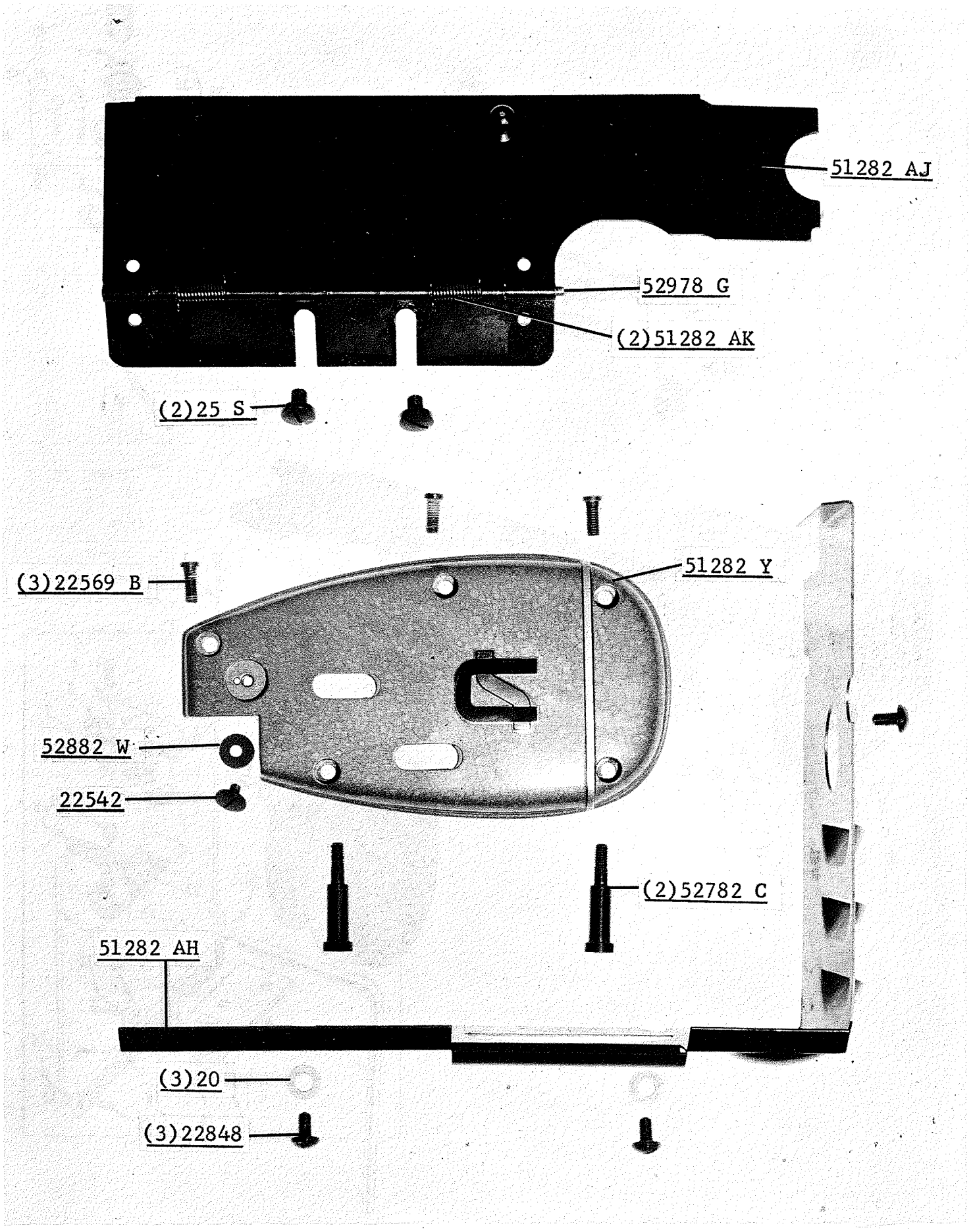
51282 AJ
52978 G
(2)51282 AK
(2)25 S
(3)22569 B
51282 Y
52882 W
22542
(2)52782 C
51282 AH
(3)20
(3)22848

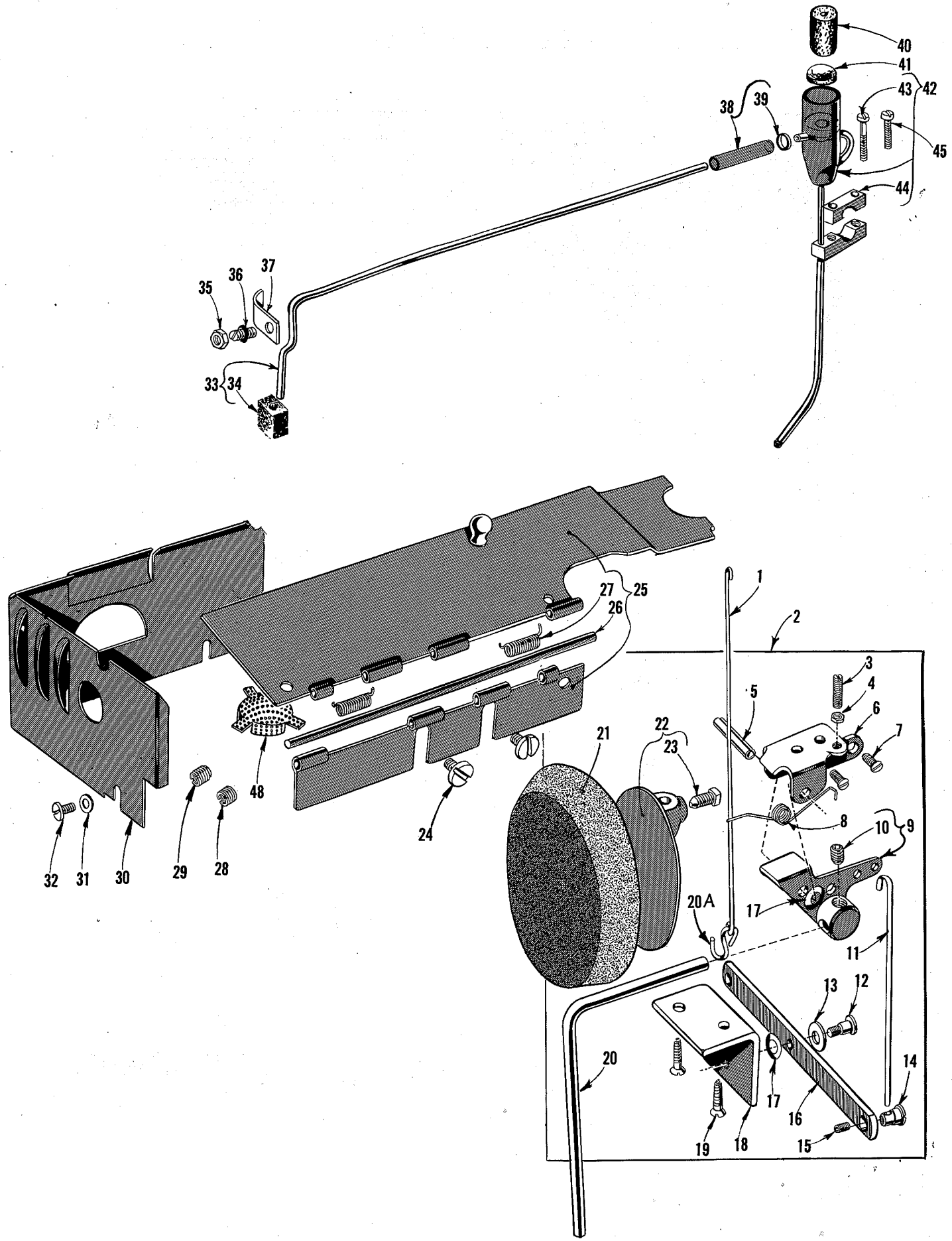
40
41
42
43
44
45
38
39
35
36
37
33
34
27
25
26
1
2
3
4
5
6
7
8
9
10
11
12
13
14
15
16
17
18
19
20
20A
21
22
23
24
28
29
30
31
32
48

KNEE PRESS ASSEMBLY, OIL SIPHON ASSEMBLY AND MISCELLANEOUS COVERS

Ref. No.	Part No.	Description	Amt. Req.
1	51493 BC	Lifter Link	1
2	21660 H	Knee Press Assembly	1
3	92201	Screw	1
4	12982	Nut	1
5	660-219 G	Roll Pin	1
6	21664 F	Mounting Bracket	1
7	80	Screw, for attaching	2
8	21662 V	Torsion Spring	1
9	21662 R	Knee Press Lifter Arm	1
10	22650 CE-6	Screw	1
11	21662 T	Knee Press Link	1
12	22557 A	Screw	1
13	43137 E	Washer	1
14	21662 S	Knee Press Link Connection	1
15	531	Screw	1
16	21662 U	Knee Press Lever	1
17	39536 AD	Spring Washer	2
18	21664 C	Bracket	1
19	SC303	Wood Screw, #12 x 1 inch	2
20	21663 A	Knee Press Plate Lever	1
20A	660-264	"S" Hook	1
21	660-168	Knee Press Plate Cushion	1
22	21664	Knee Press Plate	1
23	69 FD	Screw	1
24	25 S	Screw	2
25	51282 AJ	Hinged Oil Shield	1
26	52978 G	Hinge Pin	1
27	51282 AK	Spring	2
28	22889 D	Adaptor Plug Screw, left side	1
29	22889 C	Adaptor Plug Screw, back	2
30	51282 AH	Oil Shield	1
31	20	Washer	3
32	22848	Screw	3
33	51294 M	Oil Siphon Tube	1
34	666-214	Felt Lint Filter	1
35	7947	Nut	1
36	51294 R	Screw	1
37	51294 P	Oil Tube Clamp	1
38	51294 Z	Oil Tube Connection	1
39	21212	Locking Ring, for oil siphon connection	1
40	666-201	Felt Plug	1
41	666-209	Felt Plug	1
42	51294 U	Oil Siphon Assembly	1
43	22729 B	Screw	1
44	51294 K	Clamp, upper	1
45	22729 A	Screw	1
48	51493 BK	Lint Filter Screen	1

Here are Oil Specifications for Union Special Sewing Machines

Specification 174 specifies a high quality petroleum oil, viscosity 100 seconds at 100°F. Recommended for all oiling applications on high speed machines.

Specification 175 specifies a high quality petroleum oil, viscosity 100 seconds at 100°F., water white or with a maximum A.S.T.M. color number of 1. *For use where freedom from oil staining is paramount.*

Specification 87 specifies a high quality petroleum oil, viscosity 300 seconds at 100°F.

Specification 100 specifies a general purpose high quality grease for use in ball bearings and transmitters. It is similar to commercial N.L.G.I., grease No. 3. Where No. 3 grease is not obtainable, No. 2 may be used.

UNION SPECIAL SPECIFICATION NO.	174	175	87
Viscosity S.S.U. at 100°F	90-125	90-125	300-350
Flash (Min.)	350	350	350
Pour (Max.)	20	20	20
Color A.S.T.M. (Max.)	3	1	3
Neutralization No. (Max.)	0.10	0.10	0.10
Viscosity Index (D & D Min.)	85	85	85
Compounding	None	None	None
Copper Corrosion (Max.)	1A	1A	1A
*Anline No.	175-225	175-225	175-225

*Used with Buna N Rubber "O" Retainers

NOTE 1: The use of non-corrosive additives in oils meeting above classification is desirable but not essential. These may include:

1. Oxidation inhibitors
2. Rust inhibitors
3. Lubricity additives
4. Anti-oxidants
5. Film strength additives

These additives must be completely soluble in the oil and not removable by wick feeding nor shall they separate.

NOTE 2: Oils containing the following type additives shall not be used at any time:

1. Extreme pressure additives—corrosive
2. Tackiness or adhesive additives
3. Lead soap additives
4. Detergents

FINEST QUALITY

UNION SPECIAL CORPORATION

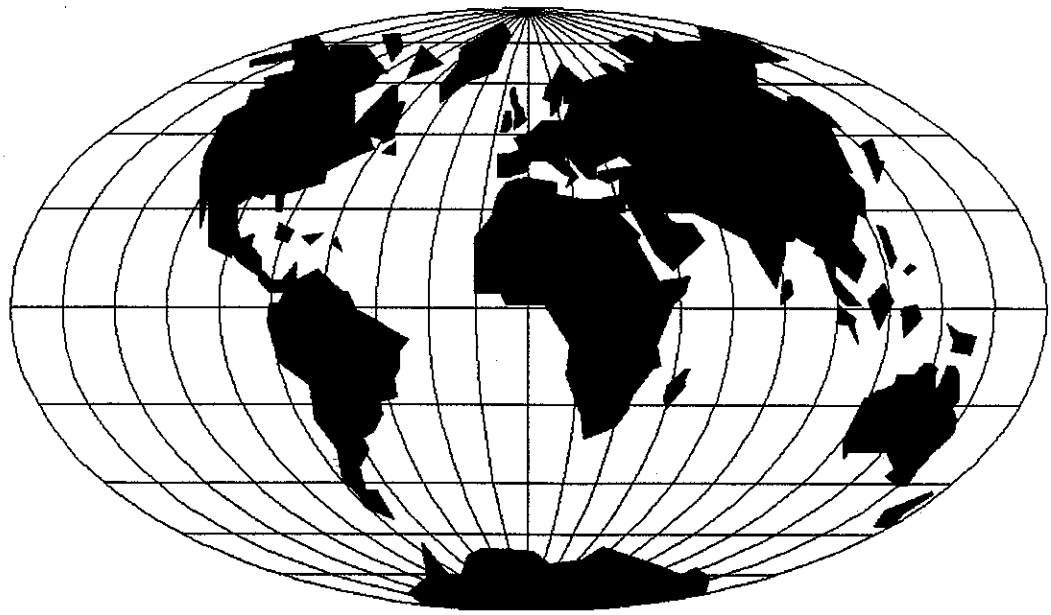

WORLDWIDE SALES AND SERVICE

Union Special Corporation maintains sales and service facilities throughout the world. These offices will aid you in the selection of the right sewing equipment for your particular operation. Union Special Corporation representatives and service technicians are factory trained and are able to serve your needs promptly and efficiently. Whatever your location, there is a qualified representative to serve you.

Brussels, Belgium
Charlotte, N.C.
El Paso, TX
Hong Kong, China
Huntley, IL
Leicester, England
Lille, France
Miami, FL
Milan, Italy
Möglingen, Germany
Montreal, Quebec
Osaka, Japan
Santa Fe Springs, CA

Other Representatives throughout all parts of the world.

Finest Quality

Union Special®
INDUSTRIAL SEWING EQUIPMENT